VEGA

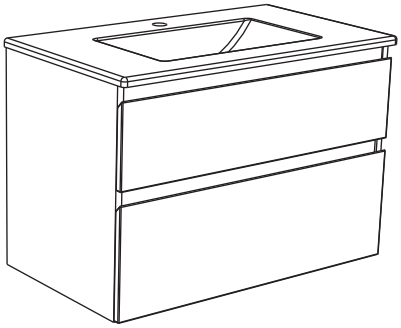

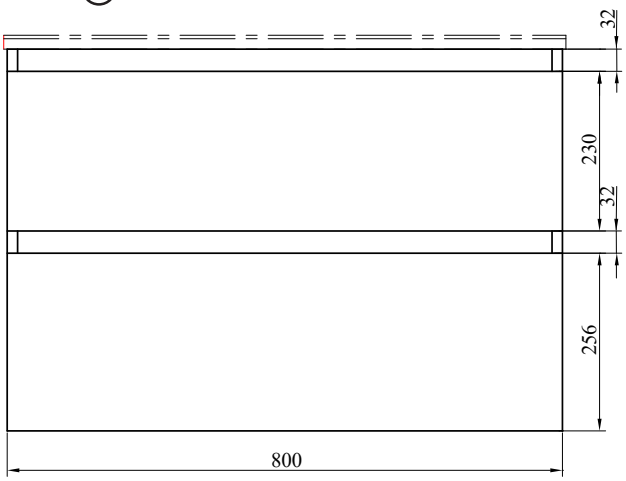

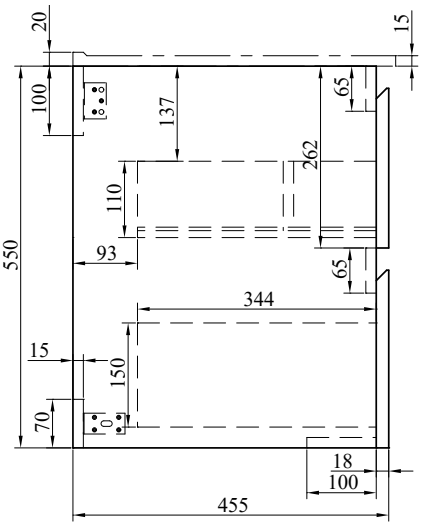

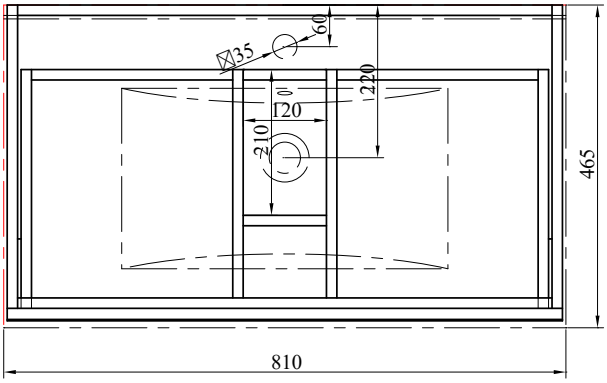

Ver. 2026-11-03